EE352 Automatic Control

Dr. Lilantha Samaranayake

Department of Electrical and Electronic Engineering
University of Peradeniya
Deep Vision, Bright Future

Nonlinear Differential Equations

- Many physical systems are nonlinear and they must be described by nonlinear differential equations.
- Consider a simple pendulum: The rotational motion can be described by $ml^2\ddot{\theta} + mgl\sin\theta = 0$
- Which results in the differential equation

$$\frac{d^2\theta(t)}{dt^2} + \frac{g}{l}\sin\theta(t) = 0$$

- Since θ appears as a sinusoidal function, this system is non-linear.

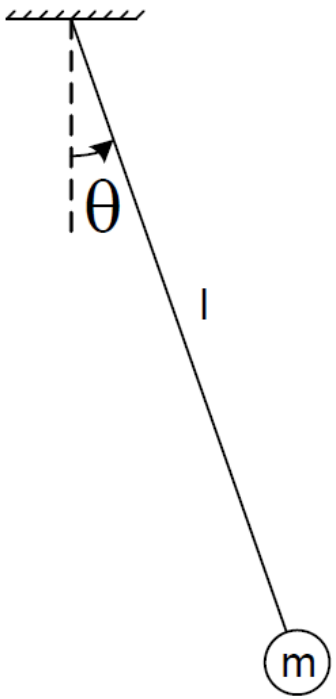

Linearization of nonlinear systems

- In practice, some devices have moderate nonlinear characteristics or they become nonlinear only in certain operating regions.
- For these devices, using linear system models may give reasonable results.
- However, for highly nonlinear systems, a linearized model is valid only within a small range from the operating point where the linearization is done.
- The linearized model may contain time varying elements.

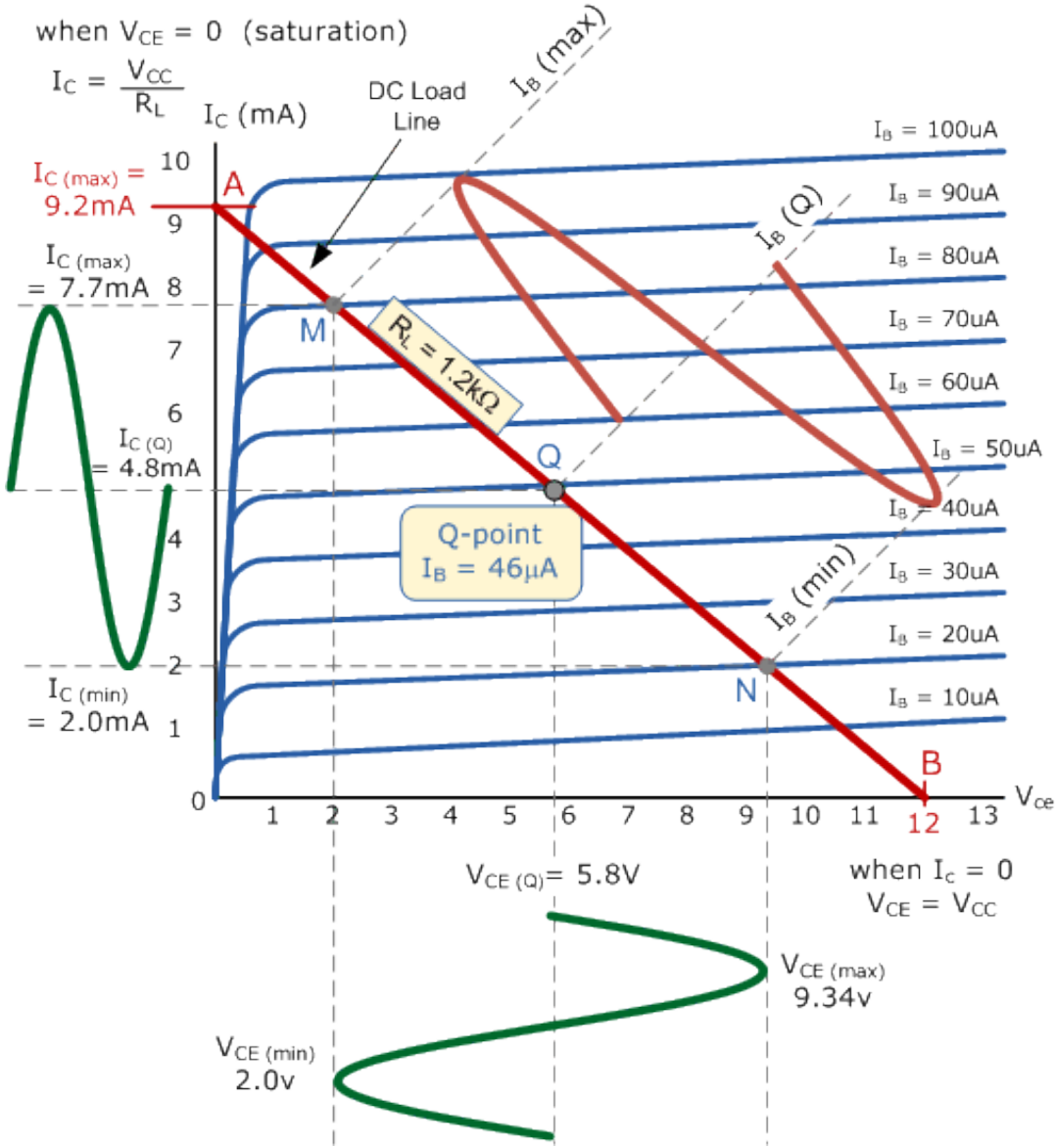

Linearization of nonlinear systems contd.,

- Let the nonlinear system be represented by

$$\frac{dx(t)}{dt} = f\big(x(t), r(t)\big)$$

where

$$x(t)\ is\ n \times 1\ state\ vector,$$
$$r(t)\ is\ p \times 1\ input\ vector,$$
$$f\ is\ n\ \times 1\ function\ vector$$

- *Ex:*

$$\frac{dx_1(t)}{dt} = x_1(t) + x_2^2(t) = f_1\big(x_1(t), x_2(t), r(t)\big)$$
$$\frac{dx_2(t)}{dt} = x_1(t) + r(t) = f_2\big(x_1(t), x_2(t), r(t)\big)$$

Linearization of nonlinear systems contd.,

- The linearization process involves taking Taylor Series expansion about a nominal operating point / trajectory & neglect higher order terms than first order.
- Let the nominal trajectory be denoted by $x_0(t)$, which corresponds to the nominal operating point $r_0(t)$ and some fixed initial states.
- Expanding the nonlinear state equation into a Taylor Series about $x(t) = x_0(t)$ and neglecting all higher order terms.
- $\frac{dx_i(t)}{dt} = f_i\big(x_0(t), r_0(t)\big) + \sum_{j=1}^{n} \frac{\partial f_i\big(x(t),r(t)\big)}{\partial x_j(t)}\Big|_{x_0(t),r_0(t)} \times \Big(x_j(t) - x_{0j}(t)\Big) + \sum_{j=1}^{p} \frac{\partial f_i\big(x(t),r(t)\big)}{\partial r_j(t)}\Big|_{x_0(t),r_0(t)} \times \Big(r_j(t) - r_{0j}(t)\Big)$

where $i = 1,2,3 \cdots n$

Linearization of nonlinear systems contd.,

- Let $\Delta x_j(t) = x_j(t) - x_{0j}(t), \Delta x_i(t) = x_i(t) - x_{0i}(t)$ and $\Delta r_j(t) = r_j(t) - r_{0j}(t)$
- Since $\frac{dx_{0i}(t)}{dt} = f_i\big(x_0(t), r_0(t)\big)$, $\frac{d\Delta x_i(t)}{dt} = \frac{dx_i(t)}{dt} - \frac{dx_{0i}(t)}{dt}$
- We can re-write the simplified Taylor Series expansion as

$$\frac{d\Delta x_i(t)}{dt}$$

$$= \sum_{j=1}^{n} \frac{\partial f_i\big(x(t), r(t)\big)}{\partial x_j(t)} \Big|_{x_0(t), r_0(t)} \Delta x_j(t) + \sum_{j=1}^{p} \frac{\partial f_i\big(x(t), r(t)\big)}{\partial r_j(t)} \Big|_{x_0(t), r_0(t)} \Delta r_j(t)$$

$$A^* = \sum_{j=1}^{n} \frac{\partial f_i\big(x(t), r(t)\big)}{\partial x_j(t)} \Big|_{x_0(t), r_0(t)}$$

$$B^* = \sum_{j=1}^{p} \frac{\partial f_i\big(x(t), r(t)\big)}{\partial r_j(t)} \Big|_{x_0(t), r_0(t)}$$

$$\frac{d\Delta x_i(t)}{dt} = A^* \Delta x_j(t) + B^* \Delta r_j(t)$$

Linearization of nonlinear systems contd.,

$$\frac{d\Delta x_i(t)}{dt} = A^*\Delta x_j(t) + B^*\Delta r_j(t)$$

$$A^* = \begin{bmatrix} \frac{\partial f_1}{\partial x_1} & \frac{\partial f_1}{\partial x_2} & \frac{\partial f_1}{\partial x_3} & \cdots & \frac{\partial f_1}{\partial x_n} \\ \frac{\partial f_2}{\partial x_1} & \frac{\partial f_2}{\partial x_2} & \frac{\partial f_2}{\partial x_3} & \cdots & \frac{\partial f_2}{\partial x_n} \\ \frac{\partial f_3}{\partial x_1} & \frac{\partial f_3}{\partial x_2} & \frac{\partial f_3}{\partial x_3} & \cdots & \frac{\partial f_3}{\partial x_n} \\ \vdots & \vdots & \vdots & \ddots & \vdots \\ \frac{\partial f_n}{\partial x_1} & \frac{\partial f_n}{\partial x_2} & \frac{\partial f_n}{\partial x_3} & \cdots & \frac{\partial f_n}{\partial x_n} \end{bmatrix}, B^* = \begin{bmatrix} \frac{\partial f_1}{\partial r} & \frac{\partial f_1}{\partial r_2} & \frac{\partial f_1}{\partial r_3} & \cdots & \frac{\partial f_1}{\partial r_p} \\ \frac{\partial f_2}{\partial r_1} & \frac{\partial f_2}{\partial r_2} & \frac{\partial f_2}{\partial r_3} & \cdots & \frac{\partial f_2}{\partial r_p} \\ \frac{\partial f_3}{\partial r_1} & \frac{\partial f_3}{\partial r_2} & \frac{\partial f_3}{\partial r_3} & \cdots & \frac{\partial f_3}{\partial r_p} \\ \vdots & \vdots & \vdots & \ddots & \vdots \\ \frac{\partial f_n}{\partial r_1} & \frac{\partial f_n}{\partial r_2} & \frac{\partial f_n}{\partial r_3} & \cdots & \frac{\partial f_n}{\partial r_p} \end{bmatrix}$$

Examples

1. Linearize the system $\frac{dx_1(t)}{dt} = \frac{-1}{x_2^2(t)}, \frac{dx_2(t)}{dt} = x_1(t)u(t)$ around $x_1(0) = x_1(0) = 1$ and $\mathrm{u}(0) = 0$

2. Linearize the system $\frac{dx_1(t)}{dt} = x_1(t) + x_2^2(t), \frac{dx_2(t)}{dt} = x_1(t) + u(t)$ around $x_1(0) = x_1(0) = 1$ and $\mathrm{u}(0) = 1$

Examples contd.,
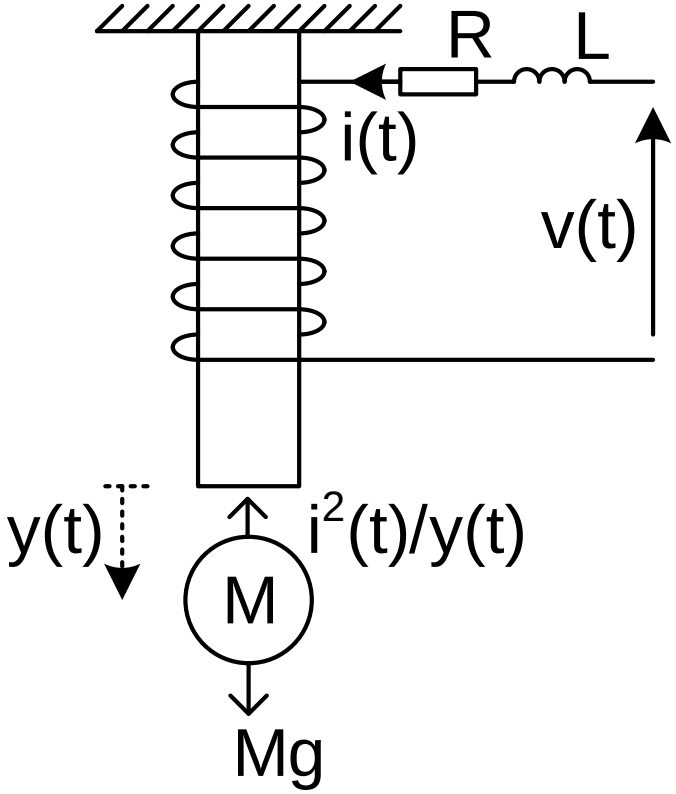
- Consider the Balancing Ball system. Derive the State Space representation of the system. Linearize the system about the equilibrium position.